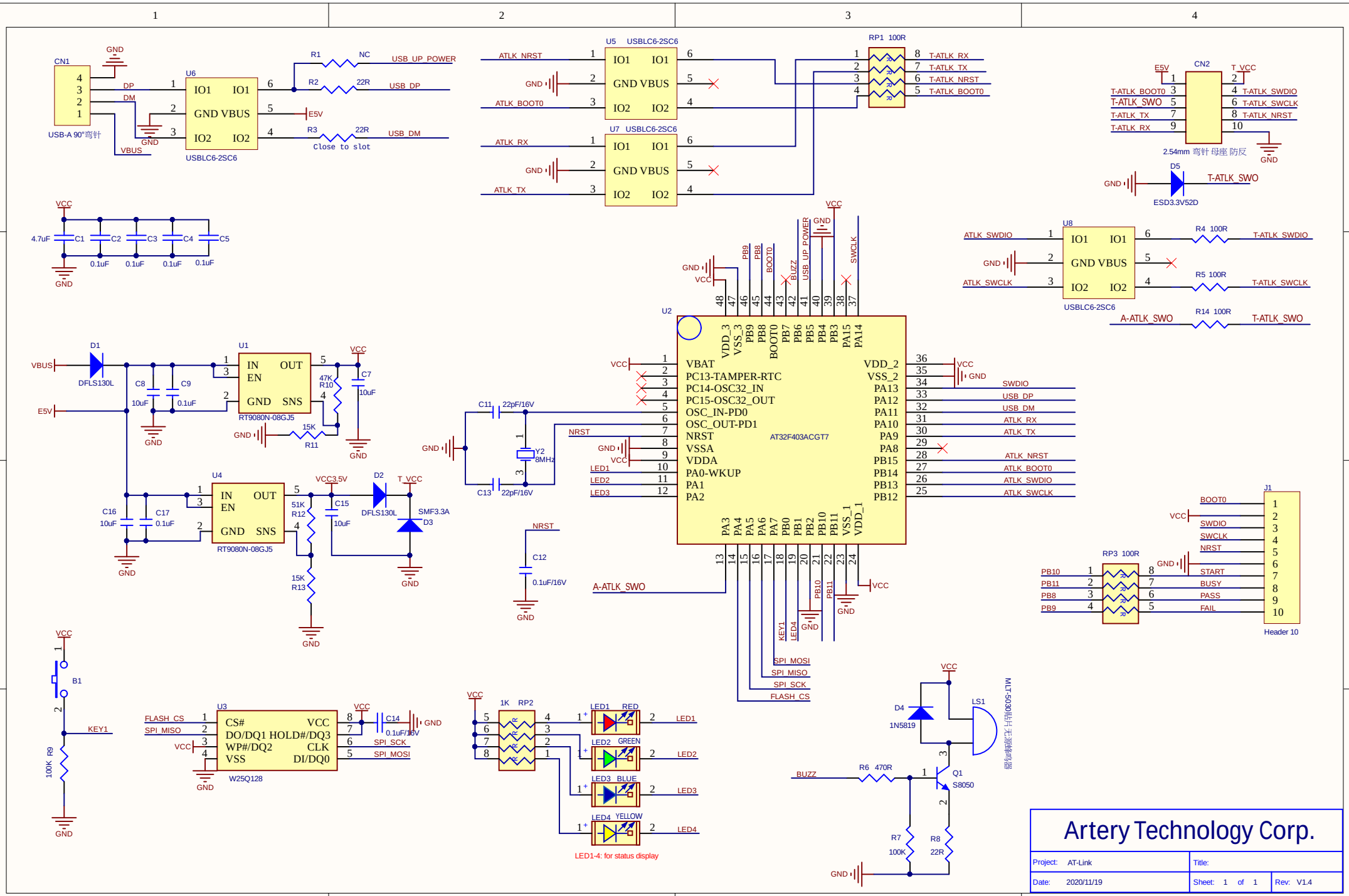
CN1
USB-A 90°弯针
U6
USBLC6-2SC6
R1 NC USB_UP_POWER
R2 22R USB_DP
R3 22R USB_DM
Close to slot
U5 USBLC6-2SC6
U7 USBLC6-2SC6
ATLK_NRST
ATLK_BOOT0
ATLK_RX
ATLK_TX
RP1 100R
T-ATLK_RX
T-ATLK_TX
T-ATLK_NRST
T-ATLK_BOOT0
CN2
2.54mm 弯针 母座 防反
T-ATLK_SWDIO
T-ATLK_SWCLK
T-ATLK_SWO
D5
ESD3.3V52D
U8
R4 100R
R5 100R
R14 100R
A-ATLK_SWO
U2
AT32F403ACGT7
VBAT
PC13-TAMPER-RTC
PC14-OSC32_IN
PC15-OSC32_OUT
OSC_IN-PD0
OSC_OUT-PD1
NRST
VSSA
VDDA
PA0-WKUP
PA1
PA2
VDD_2
VSS_2
PA13
PA12
PA11
PA10
PA9
PA8
PB15
PB14
PB13
PB12
SWDIO
USB_DP
USB_DM
ATLK_RX
ATLK_TX
ATLK_NRST
ATLK_BOOT0
ATLK_SWDIO
ATLK_SWCLK
LED1
LED2
LED3
SPI_MOSI
SPI_MISO
SPI_SCK
FLASH_CS
D1
DFLS130L
U1
RT9080N-08GJ5
U4
RT9080N-08GJ5
D2
DFLS130L
SMF3.3A
D3
Y2 8MHz
C11 22pF/16V
C13 22pF/16V
C12 0.1uF/16V
B1
KEY1
U3
W25Q128
CS#
DO/DQ1
WP#/DQ2
VSS
VCC
HOLD#/DQ3
CLK
DI/DQ0
C14 0.1uF/16V
RP2 1K
LED1 RED
LED2 GREEN
LED3 BLUE
LED4 YELLOW
LED1-4: for status display
RP3 100R
J1
Header 10
BOOT0
SWDIO
SWCLK
NRST
START
BUSY
PASS
FAIL
D4
1N5819
LS1
MLT5030贴片无源蜂鸣器
BUZZ
R6 470R
Q1
S8050
R7 100K
R8 22R
Artery Technology Corp.
Project: AT-Link
Title:
Date: 2020/11/19
Sheet: 1 of 1
Rev: V1.4