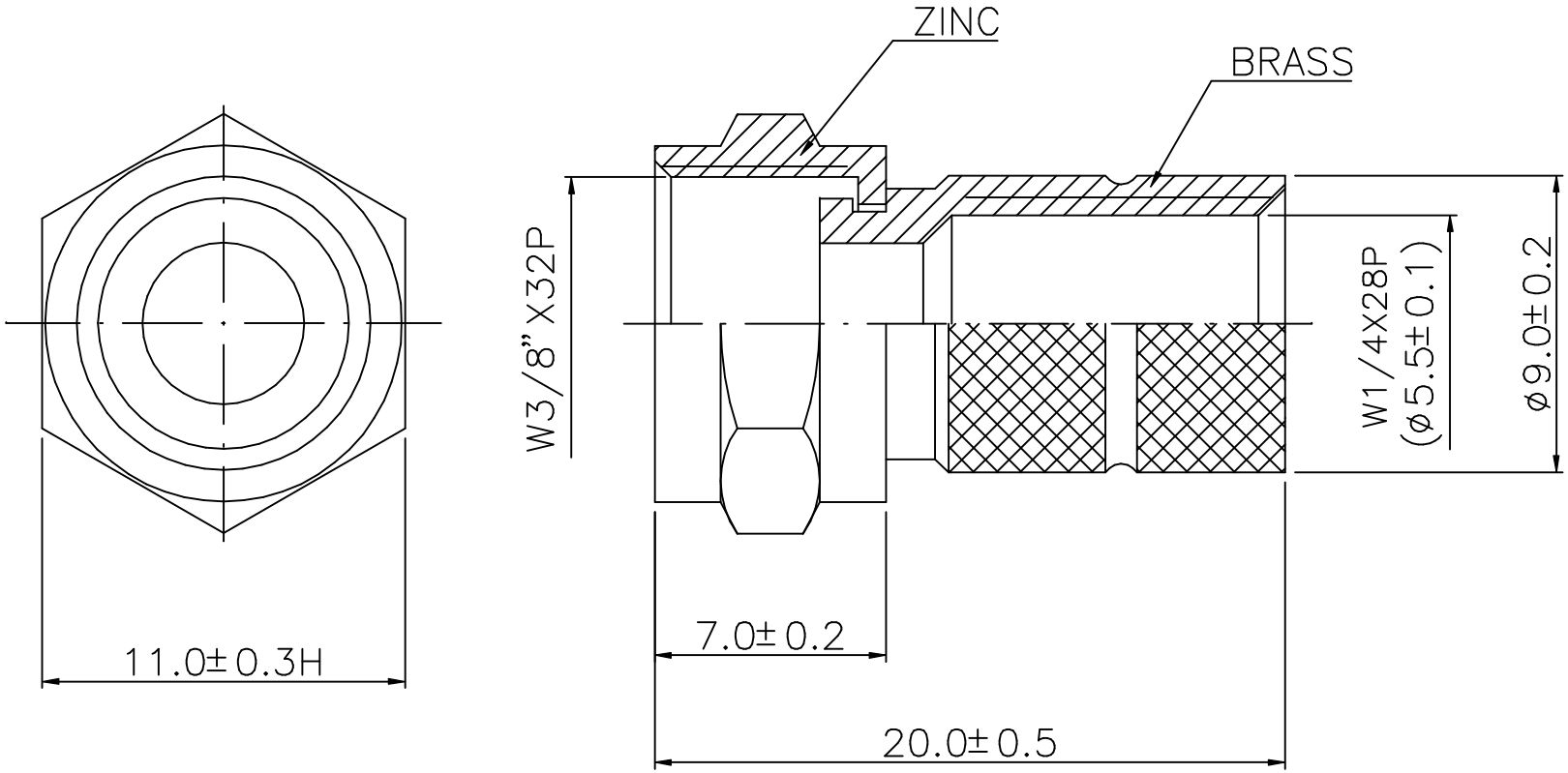

				DESCRIPTION	成品圖	SCALE	4/1 UNTTS:MM	SRD ANGLE
				MODEL NO	F810B/LB	△		
APPROVED	CHECKED	DRAWING	DESIGNED	DRAWING NO	JT00700039	△		
		XHB	XHB	FINISHING		△	2001/06/24	A1
				MATERIAL		SYE	DATE	REVISION