LAS1-AGQ

Metal push button
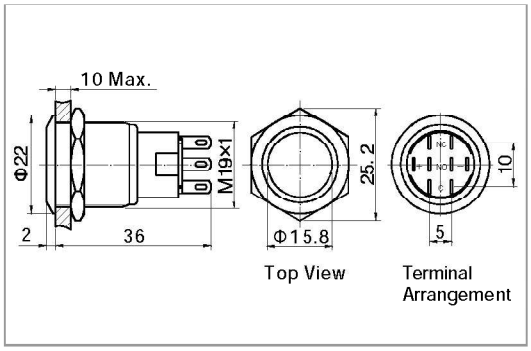
- Φ19mm Diameter
- Switch Rating: 5A/250VAC
- Contact Configuration:
  1NO1NC/2NO2NC
- Operation Type: Momentary/Latching
- The Crust Material: Stainless Steel
- IP Degree: Ip67, IK09