Materials :

* Insulation: Glass filled Polyamide UL 94V-0
* Contacts: Copper Alloy
* Shell: Copper Alloy
* Shell Plating:
  120μ" Tin plated over 30μ" Nickel
* Pick & Place Pad : Glass filled polyamide UL 94V-0

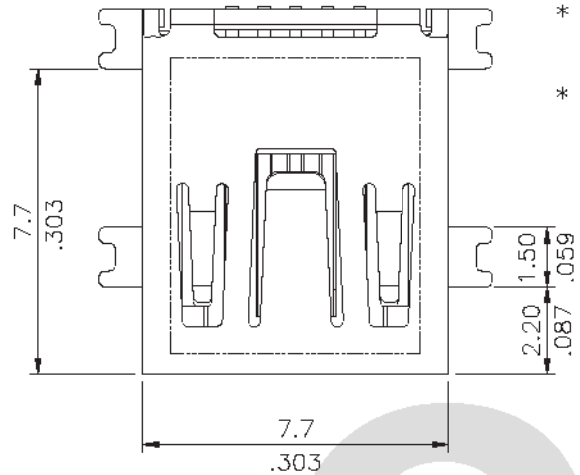

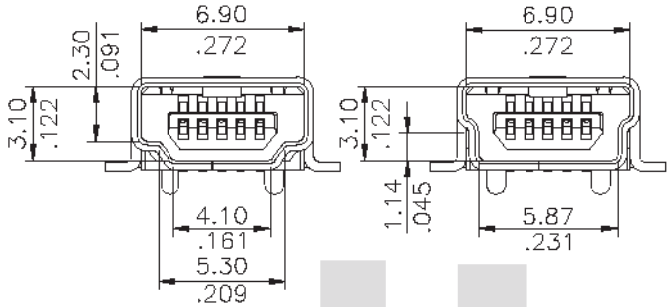

TYPE-A
P/N:CU04S*M05A0-*0
SCALE: 3/1

TYPE-B
P/N:CU04S*M15B0-*0
SCALE: 3/1

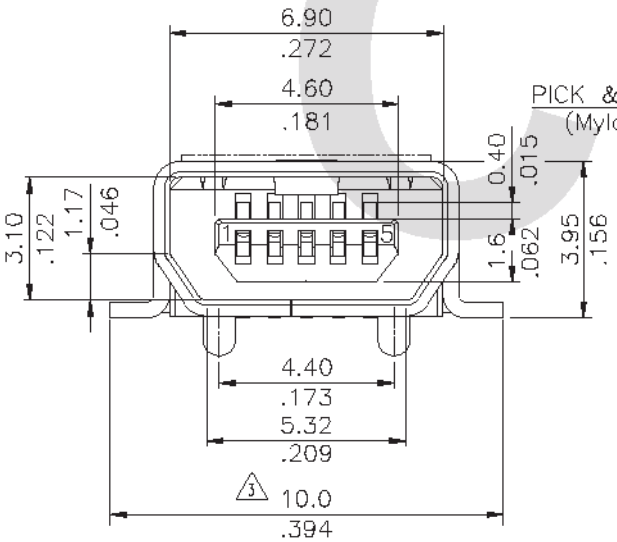

TYPE-AB
P/N:CU04S*M95C0-*0

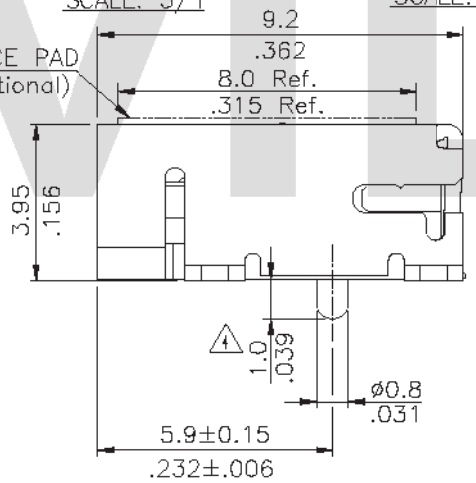

Ordering Code:

CU04 S C M 9 5 C 0 -R0
① ② ③ ④ ⑤ ⑥ ⑦ ⑧ ⑨

① Series No.
② S= Socket
③ Plating option:
  A= Selective Gold flash plated over 1.27μm(50μ") Nickel
  C= Selective 0.76μm(30μ") Gold plated over 1.27μm(50μ") Nickel
④ Tail style: M= SMT Type
⑤ Insulator Color: 0= White 1= Black 9= Gray
⑥ No of Circuits: 5= 5 Pin
⑦ Type: A= Mini USB 5 Pin Type-A (White)
  B= Mini USB 5 Pin Type-B (Black)
  C= Mini USB 5 Pin Type-AB (Gray)
⑧ Option: 0= Standard
⑨ Packing Option:
  -R0= Tape & Reel Packing (With Pick & Place Pad)
  -T0= Tube Packing

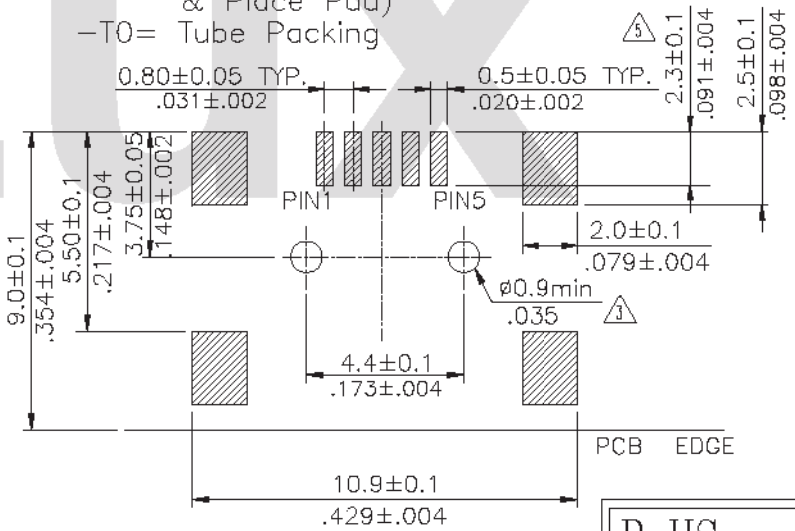

Recommended P.C. Board Layout

RoHS Compliant

SYM	NAME	DATE	REVISIONS
4	SUN	7/14/05'	ECN05240
3	Sandy	11/23/04'	ECN04469
2	Eisley	11/28/03'	ECN03430
5	Sandy	7/10/06'	ECN06219

CVILUX CORP.
2006.07.13
ISSUED

		DATE
DRAWN BY:	Sandy	07/10-06'
ENGINEER:	Eisley	07/11-06'
CHECKED BY:	David	07/12-06'
APPROVED BY:	Alex	07/12-06'

UNIT: mm / inch

TOLERANCE UNLESS OTHERWISE SPECIFIED

.X ± 0.20/.008	X.° ± 1°
.XX ± 0.10/.004	.X° ±
.XXX ± 0.05/.002	.XX° ±

TITLE: MINI USB 5 PIN SMT BOARD MOUNT CONNECTOR

MATERIAL:

FINISH:

瀚荃股份有限公司
CviLux Corporation

DRAWING NO.	CU0404SK	PART NO.	CU04S*M*5*0-*0
SCALE	4 / 1	SHEET 1 OF 1	

CviLux